3 m - Cylindrical, straight aluminium pole for ARIZONA (APD130225-AR-20993)

APD130225-AR-20993

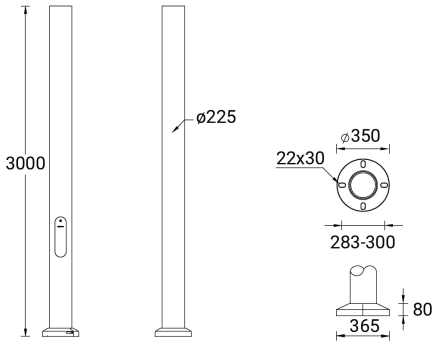

Technical information

Height (mm)	3000
Diameter / dimension (mm)	225
Weight (kg)	19.98
Horizontal loads resistance (V ref,0 - m/s)	40
Luminaire weight (max - kg)	15
Luminaire wind catching area (max - m2)	0.16
Material	Aluminium
Product colours	Black, Dark Grey, White, Matt Silver, Bronze, Concrete - Urban, Softscape - Urban, Stone - Urban, Corten - Urban, Oak - Woodland, Walnut - Woodland, Pine - Woodland

We reserve the right to make technical and design changes.

THAILAND
LIGMAN Lighting Co.,Ltd.
17/2 Moo 4, Monthong, Bang Nam Priao,
24150 Chachoengsao - Thailand
info@ligman.com

3 m - Cylindrical, straight aluminium pole for ARIZONA (APD130225-AR-20993)

Accessories

Root mount kit
A20791

Circuit breaker box IP44
A21291

We reserve the right to make technical and design changes.

06:59, 16-04-2024

https://www.ligman.com/3-m-cylindrical-straight-aluminium-pole-for-arizona-apd130225-ar-20993/

THAILAND
LIGMAN Lighting Co.,Ltd.
17/2 Moo 4, Monthong, Bang Nam Priao,
24150 Chachoengsao - Thailand
info@ligman.com